2020 DOMANE+ LT SERVICE MANUAL

SUPPLEMENT TO THE 2020 DOMANE SLR/SL SERVICE MANUAL

Table of Contents

Gain access to the gearbox	1
Install and connect the speed sensor	2
Install and connect the controller	3
Route the cables in the down tube cable guides	3
Reinstall	4

2020 Domane+ LT Service Manual

Gain access to the gearbox

For the following procedures, you will need to have access to the gearbox.

1. Remove the drivepack.
2. Remove the front chain rings.
   a. Use a chain whip to hold the crank in place.
   b. Use a bottom bracket tool to loosen and remove the lock ring.
   c. Remove the chainring.

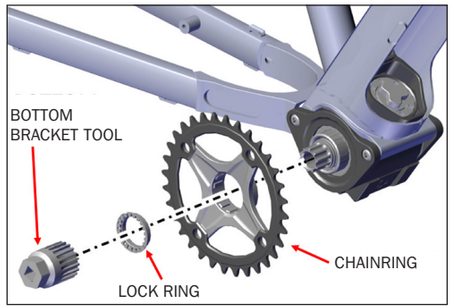

3. Remove the four bolts from the gearbox cover.

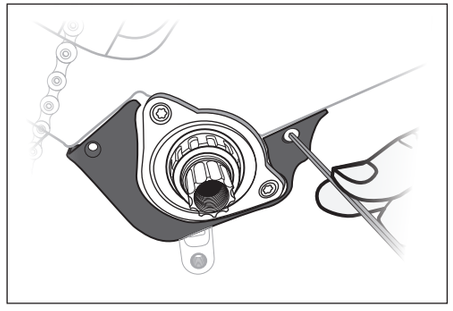

4. Remove the four T30 bolts from the gearbox.

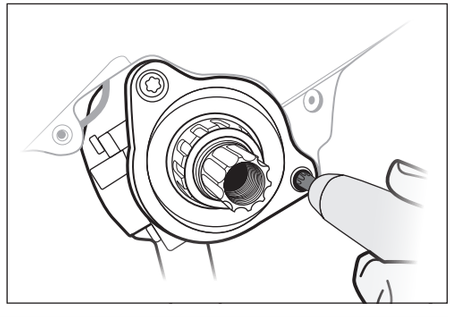

Install and connect the speed sensor

1. Install the speed sensor connector and cable through the slotted hole in the speed sensor spacer and into the slot in the non-driveside chainstay.

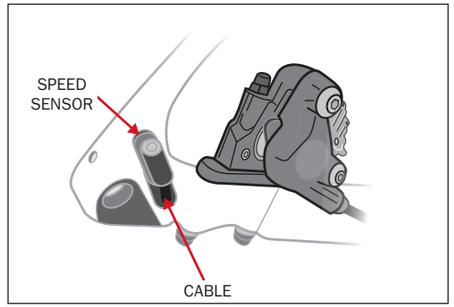

NOTE The speed sensor should fit into the speed sensor spacer. The speed sensor tab will fit into the hole on the spacer and the hole on the sensor will align with the speed sensor slot.

2. Route the connector and cable forward through the chainstay to the drive unit.
3. Torque the speed sensor bolt to 4 Nm.
4. Plug the speed sensor connection into the green slot as shown.
5. Push any excess cable length into the bicycle frame around the drive unit and inside the driveside chainstay.

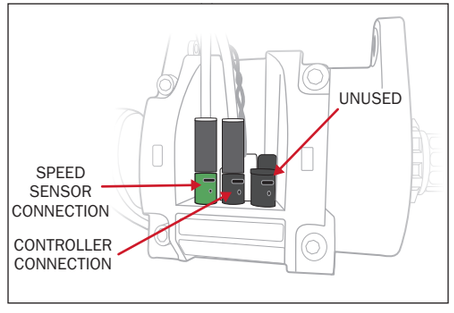

Install and connect the controller

1. Route the controller cable through the top tube, into the head tube and down the down tube to the gearbox.

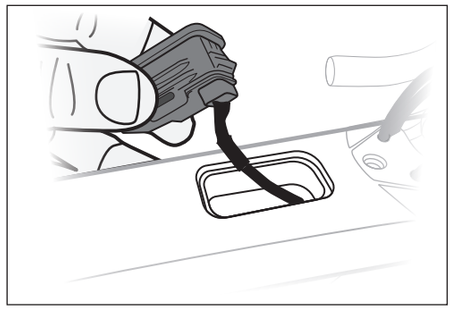

2. Connect the controller cable to the gearbox as shown.

3. Push any excess cable length into the non-driveside chainstay or the top tube.

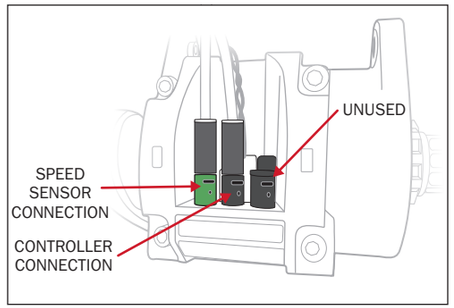

Route the cables in the down tube cable guides

Order of cable routing in the down tube (driveside to non-driveside):

- Rear derailleur
- Rear brake
- Controller wire
- Front derailleur

NOTE Check to make sure there are no crossed, twisted or wrapped cable routings anywhere in the frame. The cable housings should lay as flat as possible as they pass through the frame.

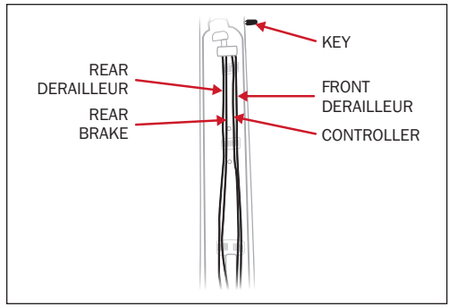

Reinstall

1. Make sure the threads for the gearbox attachment bolts in the bike frame are clean and have no grease.

NOTE The Fazua fasteners ship with a factory-applied threadlocker.

2. Reinstall the gearbox. Torque the four bolts to 8.0–8.5 Nm.

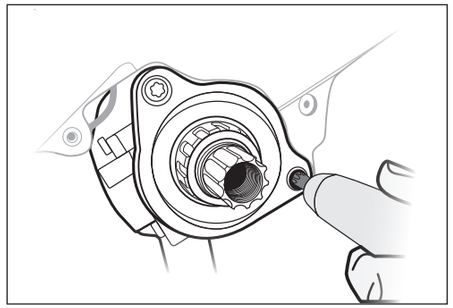

3. Reinstall the gearbox cover. Torque the four bolts to 4 Nm.

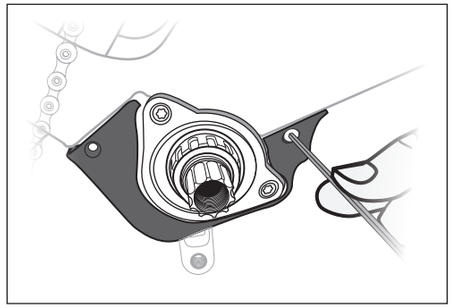

4. Reinstall the chainring.
   a. Mount the chainring on the motor shaft.
   b. Use a chain whip to hold the crank in place.
   c. Install the lock ring.
   d. Use a bottom bracket tool to torque the lock ring to 20–25 Nm.

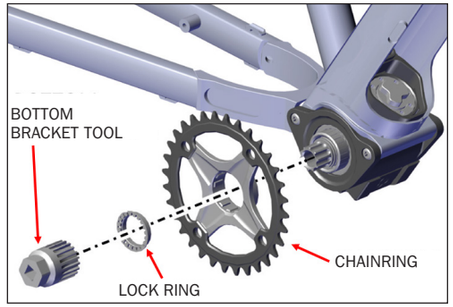

5. Reinstall the drivepack.